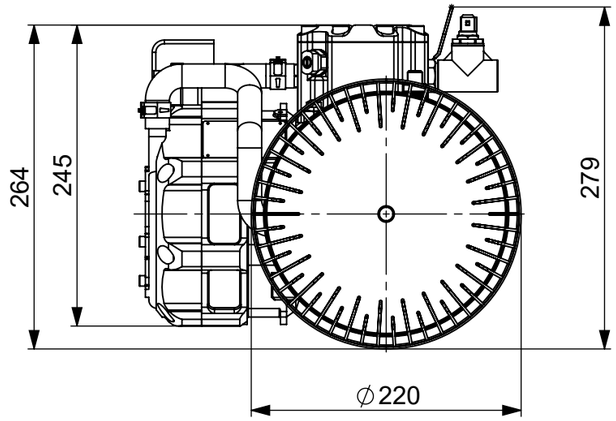

Horizontal installation

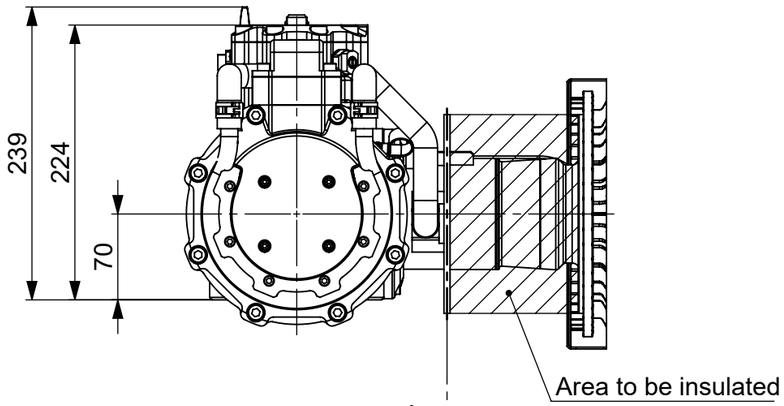

Possible vertical installations

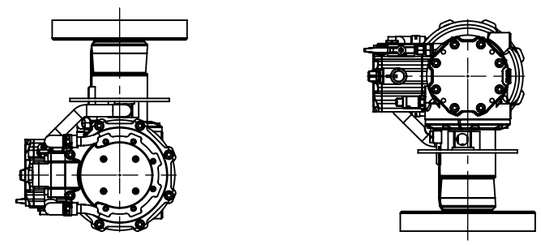

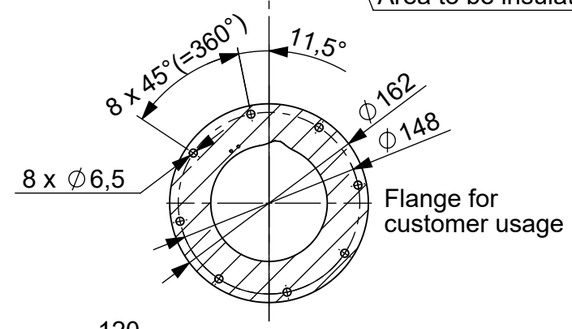

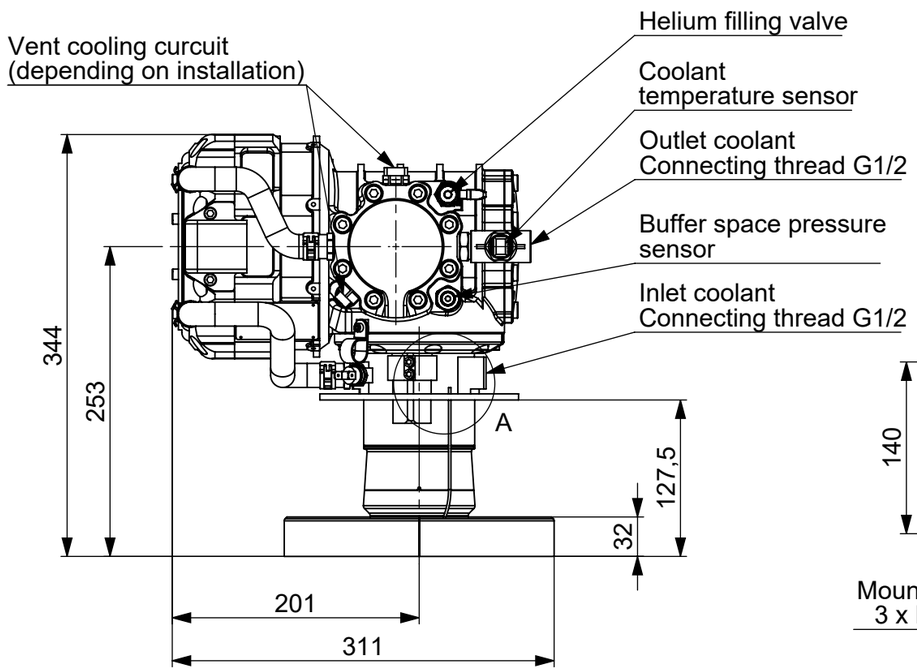

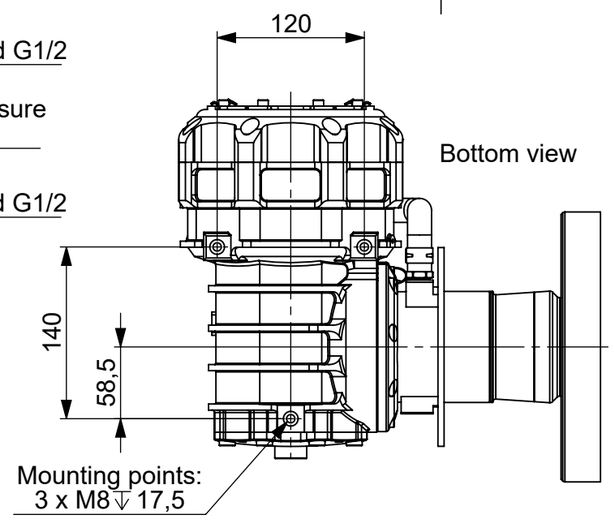

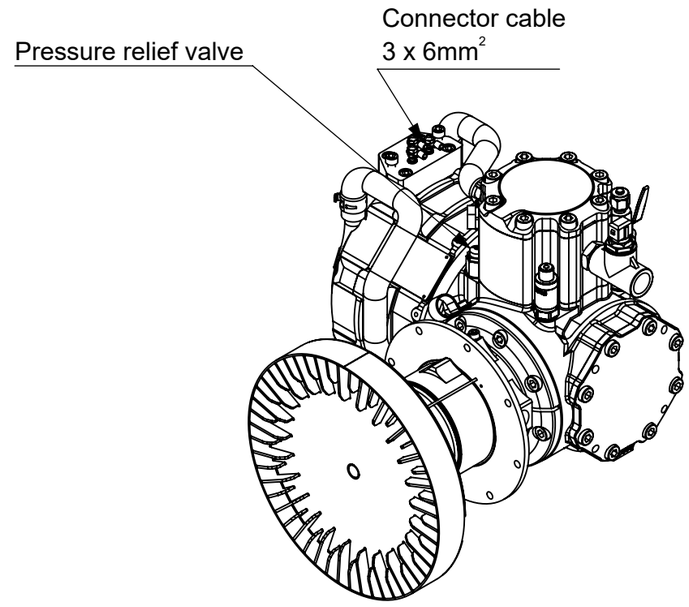

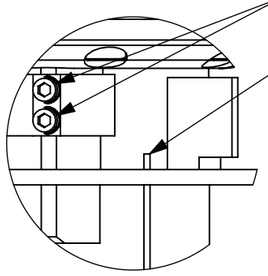

DETAIL A
SCALE 1 : 2

frauscher motors
Gewerbestraße 7
A-4774 St. Marienkirchen
E-Mail: office@frauscher-motors.com
Tel: +43 7711 31820-0
Fax: +43 7711 31820-5000

	Name	Date	Size:
Drawn:	STI	10.04.2025	A3
Checked:			
Approved:			

All dimensions in mm | Mass: 27.40 kg

Title: Stirling Generator Gen70DR

Drawing-no.: G70-00-007-00-EN

Scale 1:5 | Sheet 1 of 1